TCIDH Series System Overview

Tanz™



CRITICAL INFRASTRUCTURES

BORDER SECURITY **COASTAL SECURITY**

DETECT-ACT

System Overview

TCIDH is an advanced and powerful multisensor system designed for mid-long range security applications. It allows long range observation and detection using the most advanced thermal, short wave and day/night sensors and optics.

The multisensor system is boosted with uncooled/LWIR, short wave/SWIR and day night high performance sensors, as option TCIDH can also include a long range laser illuminator with collimator.

Designed and constructed to withstand the hashest weather and environments, including cameras and P/T coolers and heaters and military connectors for a safe and quick installation.

A wide range of sensors and configuration options are available, making TCIDH the best options for critical infrastructure, border control or military applications.

LWIR SENSORS	SWIR SENSORS	DAY/NIGHT SENSORS
384x288/12µm. 640x512/12µm. 1280x1024/12µm.	640x512/5µm.	1920x1080/2 megapixel 2064x1544/3 megapixel 3840×2160/8 megapixel
High performance Long / Mid range Cost effective	High performance Long / Mid range	High performance Long / Mid range Cost effective

System Overview

LWIR

- **35mm.**
- **50mm.**
- **75mm.**
- **100mm.**
- **20-100mm.**

640x512/1280x1024
12µm. pixel / 30fps.
<35mK. NETD
Athermal/zoom

Standard analytics / Advanced AI analytics
Fire detection HDSDI optional
Onvif/Profile S/Ethernet
Digital video stabilization
Autofocus

SWIR

- **16,5-500mm.***

640x512/1280x1024
5µm. pixel / 30fps.
<35mK. NETD
Athermal/zoom

Standard analytics / Advanced AI analytics
Onvif/Profile S/Ethernet
Digital video stabilization
Autofocus

* 3X higher performance/distance than standard 15µm. pixel sensors.

DAY/NIGHT

- **10-850mm. OIS**
- **6-540mm.**
- **6,3-365mm. OIS**
- **6-300mm.**
- **6-210mm.**

1920x1080/3840×2160
3µm. pixel
Up to 0,001 Lux
Zoom/Autofocus

Standard analytics / Advanced AI analytics
Optical video stabilization / Digital video stabilization
Onvif/Profile S/Ethernet
Turbulence mitigation
Near Infrared video / Opti

System Overview

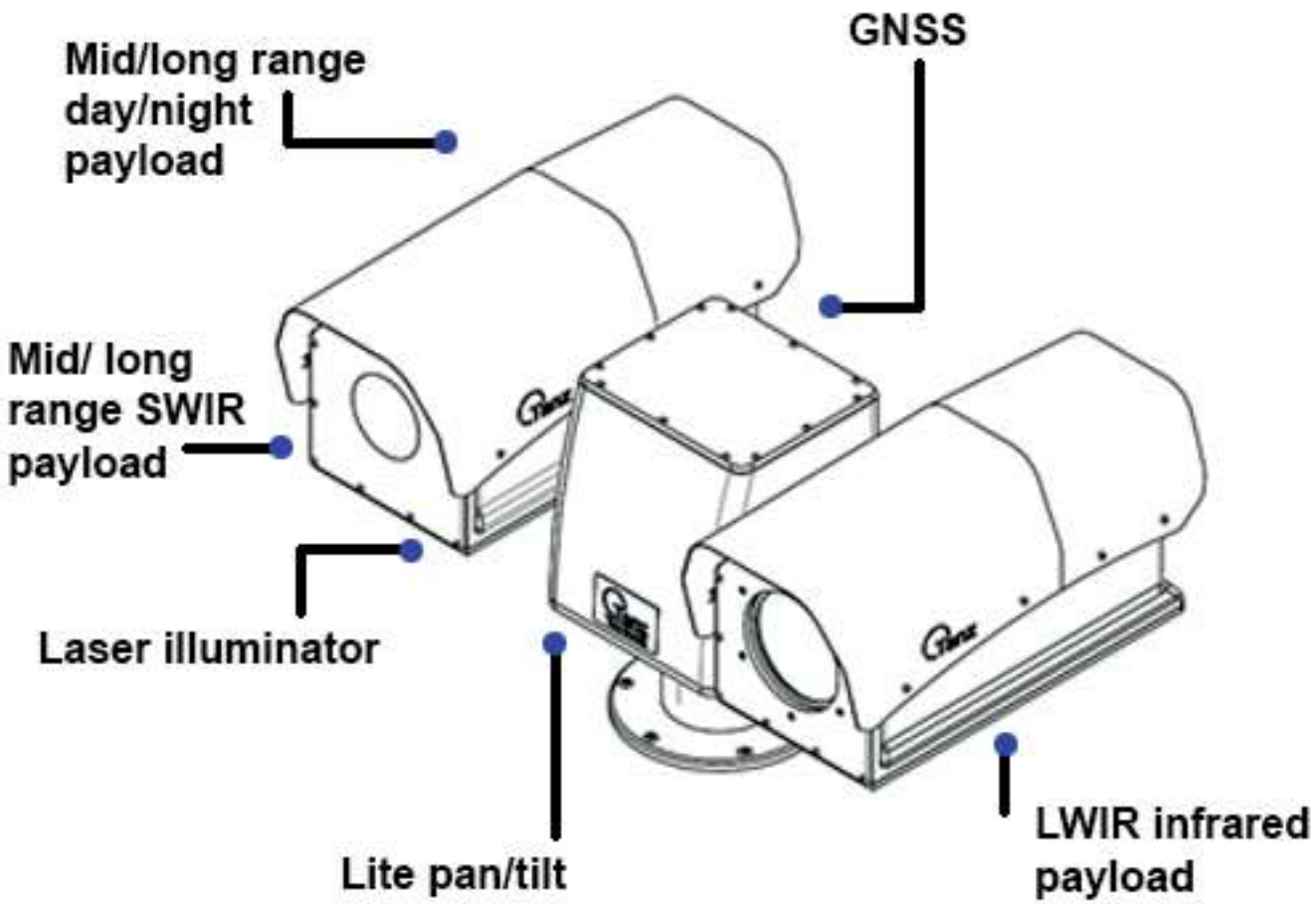

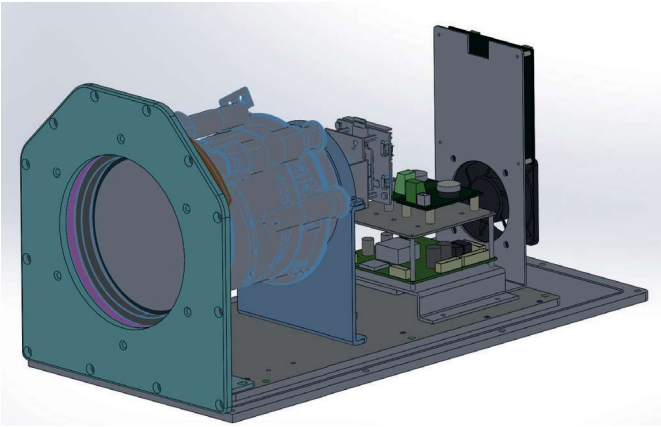

System Compatible Options

LASER ILUMINATORS

- **1Km.**
- **2Km.**
- **3Km.**

LASER RANGE FINDER

- **4Km. NATO**
- **6Km. NATO**

GNSS

- **GPS L1**
- **Galileo**
- **Glonass**

GROUND / MARINE RADARS

Directional / Omnidirectional
X and Ku band
Ground / Marine
Multiple target detection

Multi tracker
Drone detection
Drone jamming integration
Artificial Intellenge and object classification

COMMAND AND CONTROL

Multiple task control
Multilayer information
PSIM function
Tracking display

Advanced AI analytics

ADVANCED ANALYTICS / TRACKER

AI self learning engine
Object classification and learning motor
People / object detecion
Detection areas

Video tracker
Fire detection

* Check lenses, sensors and options to define TCIDH proper configuration.

TCIDH Compatible Options

LITE PAN/TILT

"T" type pan/tilt unit
10Kg. + 10Kg. max. payload
All worm gears
Azimuth 360º continuous
Elevation +90/-90º*
Max./Min azimuth speed 0,1-80º/-sec.*
Max./Min elevation speed 0,1-40º/-sec.*
Waterproof IP66
Military connectors
Giga Ethernet



* Depending in the payload weight the speed shall be adjusted.

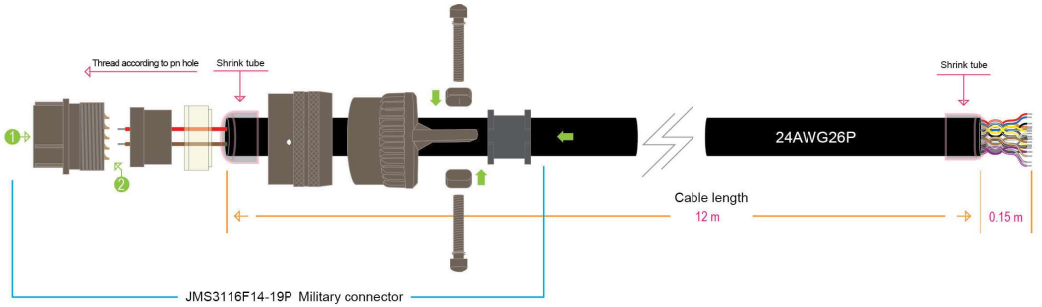

SYSTEM TECHNICAL FIGURES / INCLUDED

Electric: 24v.DC/4A. (110-220v.AC Industrial grade power supply included)
System weight without cameras: 31Kg.
System cable connnections: 12m. connection cable, waterproof/UV light ready
All militaty connectors
Matting connectors: MS3116F14-19S FEM / MS3114E14-19P MALE
PT system main connection cables: Ethernet LAN + RS485

TCIDH Series System Dimensions

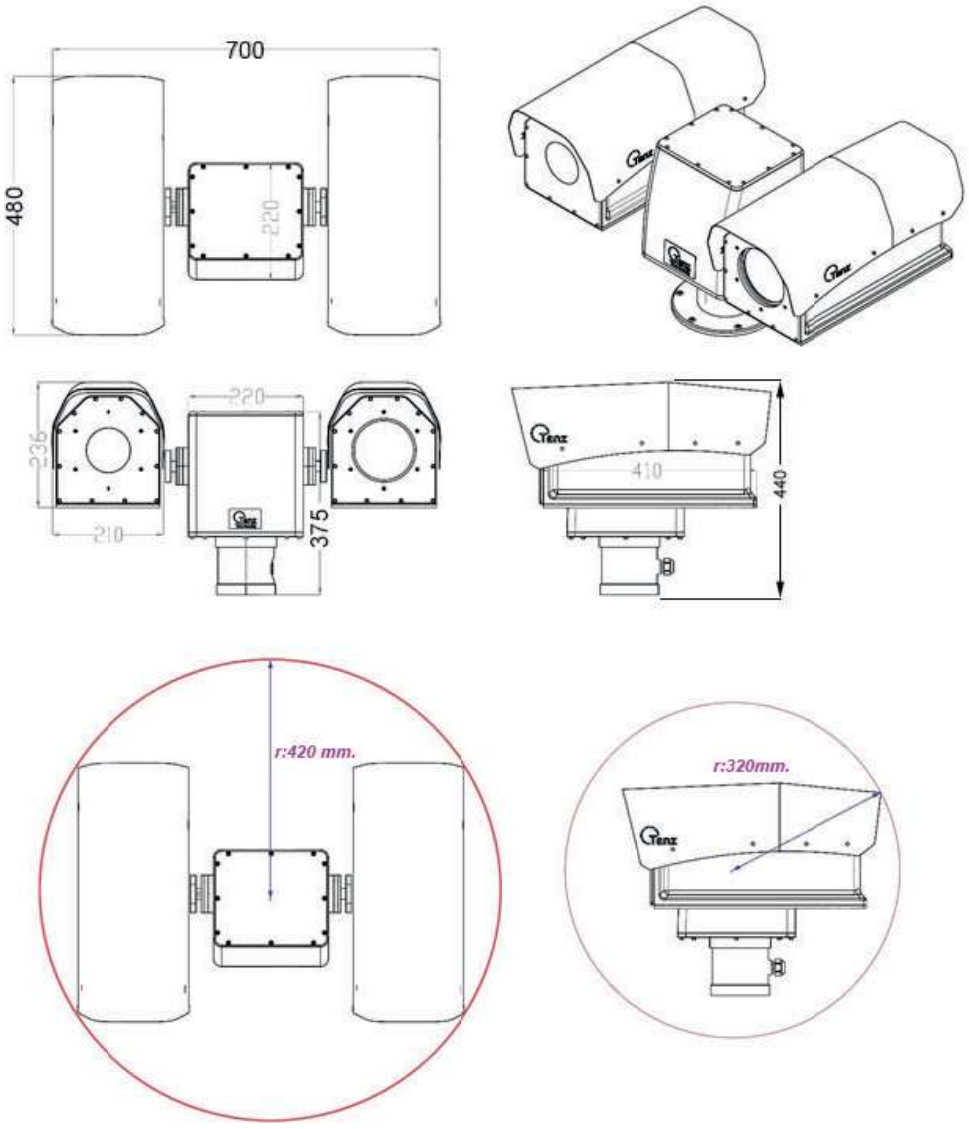

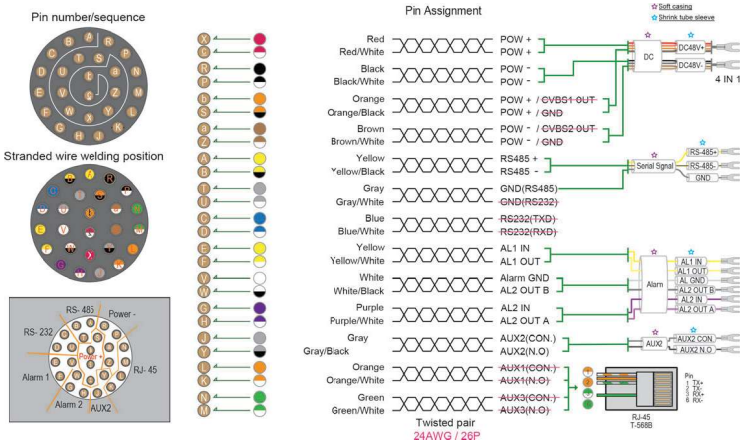

* Different weather conditions and temperature changes may affect to final distances, the stated distances are references.
* GE window, LFR, GPS, DMC and laser are optional and only applicable to selected models.
* Infrared CVBS video available only for 640x512, for 1280x1024 HDSDI available, analog video for day/night cameras not available.
* Pan/tilt speed shall be adjusted depending the payload weight.
* Tanz Security reserves the right to change products or specifications without notice.
* Tanz Security brand and logo are registered trade marks.

TCIDH Series VMS Compatibility

WIDE VMS COMPATIBLE OPTIONS

Tanz Security systems are integrated with several C2 platforms (Command and Control), also available compatibility with commercial VMS platforms.

Luxriot
milestone
AVIGILON
NetworkOptix
AXIS COMMUNICATIONS
PELCO a Motorola Solutions Company
MIRASYS
Genetec
axxonsoft
digifort
exacq Technologies
SeeTec Cayuga
aimetis
VICON
Hanwha Techwin WISENET
Cognyte
obseron
ISS
eocortex

Tanz